CA HEADED CONCRETE ANCHORS

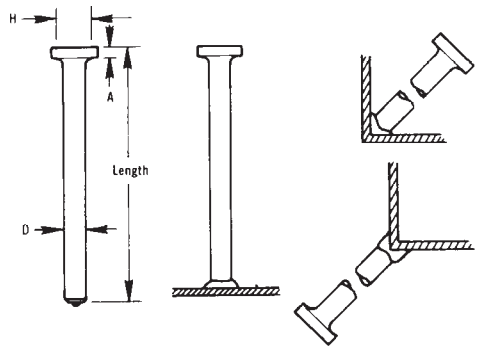

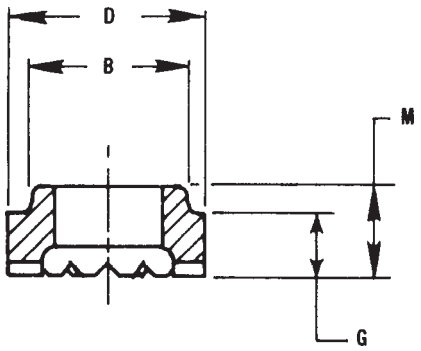

STUD SPECIFICATIONS			FERRULE SPECIFICATIONS				
D	A	H	PART NO.	B	D	G	M
1/4	.187	.500	14FER	.380	.454	.234	.390
3/8	.281	.750	38FER	.505	.640	.234	.390
1/2	.312	1.000	12FER	.650	.795	.250	.438
5/8	.312	1.250	58FER	.785	1.030	.328	.516

Description	Part No.	Pieces Box	Pounds Box	Pounds M Pieces	Description	Part No.	Pieces Box	Pounds Box	Pounds M Pieces
1/4 x 1-1/8	CA141	3000	70	23	1/2 x 3-1/8	CA123	325	73	225
1/4 x 2-11/16	CA1421	1500	65	43	1/2 x 3-5/8	CA1235	300	74	247
1/4 x 4-1/8	CA144	1000	65	65	1/2 x 4-1/8	CA124	250	70	280
3/8 x 1-3/8	CA3813	1000	67	67	1/2 x 5-5/16	CA1255	200	68	340
3/8 x 1-5/8	CA3815	1000	73	73	1/2 x 6-1/8	CA126	150	59	393
3/8 x 2-1/8	CA382	1000	91	91	1/2 x 8-1/8	CA128	100	51	504
3/8 x 2-11/16	CA3821	700	74	106	5/8 x 2-11/16	CA5821	250	77	308
3/8 x 3-1/8	CA383	600	73	122	5/8 x 4-3/16	CA584	150	66	440
3/8 x 4-1/8	CA384	400	59	148	5/8 x 5-3/16	CA585	125	66	520
3/8 x 6-1/8	CA386	250	54	216	5/8 x 6-3/16	CA586	100	62	620
1/2 x 2-1/8	CA122	400	68	168	5/8 x 6-9/16	CA5869	100	66	660
1/2 x 2-5/8	CA1225	350	70	198	5/8 x 8-3/16	CA588	50	40	784

COX INDUSTRIES CA ANCHOR STUDS are designed for welding to flat surfaces or welding in the fillet or to the heel of angles. When ordering specify if studs are to be welded to flat surfaces or in fillet or to heel of angle. All orders for studs include required ferrules.

LENGTH: Length is before weld. Stud diameters (D)1/2" and below will be approximately 1/8" shorter after welding. 5/8" will be approximately 3/16" shorter after welding. Maximum length available for cold headed product is 8-3/16". Prices on hot formed studs over 10-3/16" available upon request.

All COX INDUSTRIES headed anchors meet AWS specifications. Test reports available on request.

STAINLESS STEELS: COX INDUSRTIES studs are also available in weldable stainless steel. Type 304 is the most commonly used. Other grades of stainless steel (except Type 303) available when required.

FLUX: COX INDUSTRIES Headed Anchor Studs are solid fluxed.

MATERIAL: Low Carbon Steel.

MECHANICAL PROPERTIES: (as cold drawn)
Tensile:..... 60,000 psi min.
Reduction in Area: ..... 50% min.

Cox Industries